SEATING LAYOUT

PI00112839C

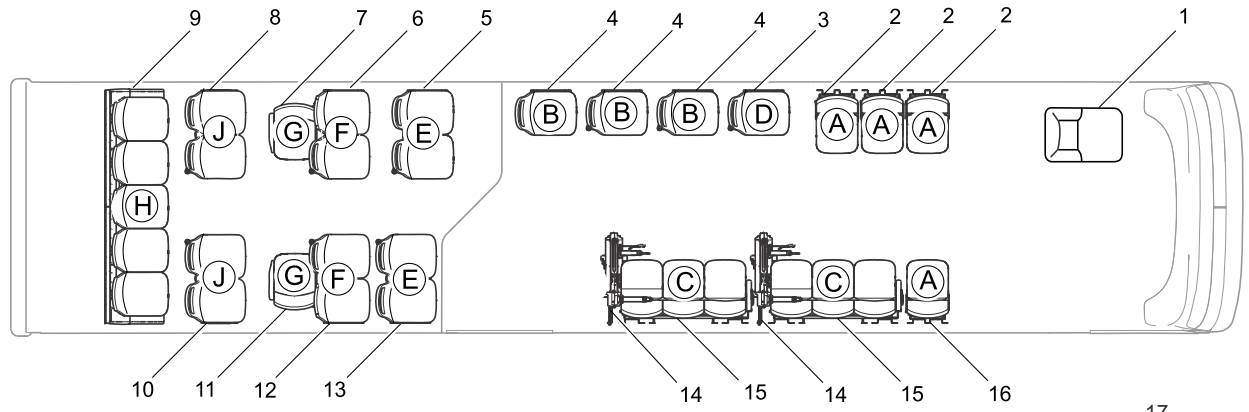

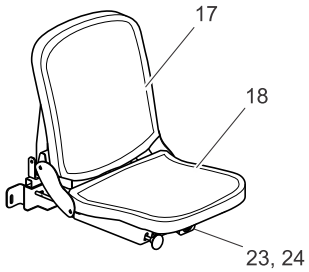

DETAIL A
(TYPICAL)

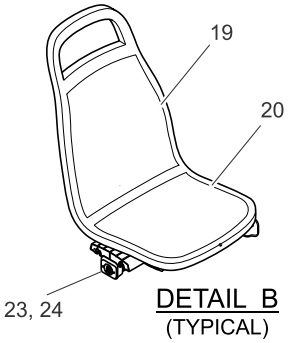

DETAIL B
(TYPICAL)

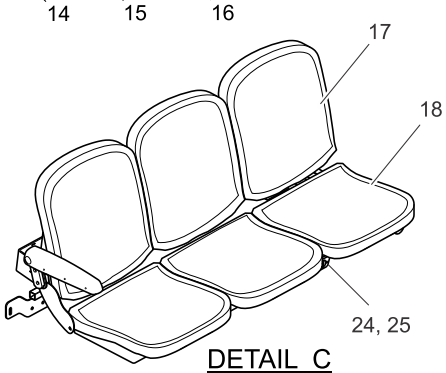

DETAIL C
(TYPICAL)

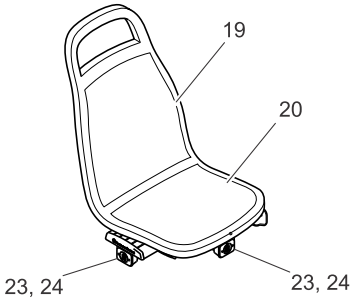

DETAIL D

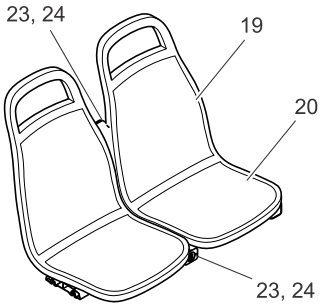

DETAIL E
(TYPICAL)

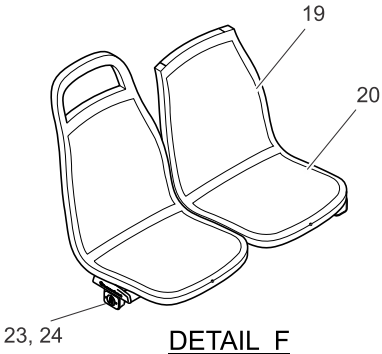

DETAIL F
(TYPICAL)

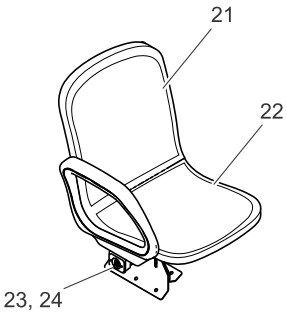

DETAIL G
(TYPICAL)

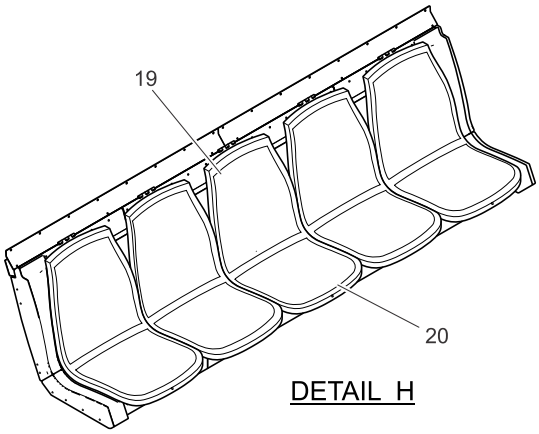

DETAIL H

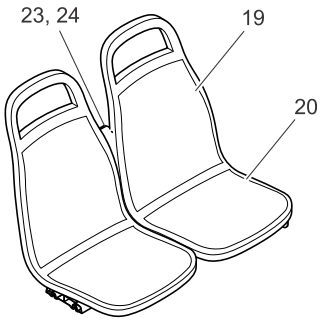

DETAIL J
(TYPICAL)

The New Flyer vehicles described in this manual may be protected by one or more patents and design applications or registrations in the United States and Canada, and in other countries. Refer to “Vehicle Patent Information” in this manual.
Copyright © 2024 New Flyer Industries Canada ULC

ITEM	QTY	PART NUMBER	DESCRIPTION
1	**1**	**967537**	**Driver's Seat Assembly**
2	3	969274	Seat Assembly, 1 Passenger Longitudinal Flip-Up with USB Charger
3	1	968987	Seat Assembly, 1 Passenger Transverse with USB Chargers
4	3	968984	Seat Assembly, 1 Passenger Transverse with USB Charger
5	1	969461	Seat Assembly, 2 Passenger Transverse with USB Chargers
6	1	969460	Seat Assembly, 2 Passenger Transverse with USB Charger
7	1	969459	Seat Assembly, 1 Passenger Longitudinal with USB Charger
8	1	969458	Seat Assembly, 2 Passenger Transverse with USB Charger
9	1	703487	Seat Assembly, 5 Passenger Rear Cross
10	1	969457	Seat Assembly, 2 Passenger Transverse with USB Charger
11	1	969456	Seat Assembly, 1 Passenger Longitudinal with USB Charger
12	1	969455	Seat Assembly, 2 Passenger Transverse with USB Charger
13	1	969454	Seat Assembly, 2 Passenger Transverse with USB Chargers
14	**2**	**969249**	**Wheelchair Barrier Assembly, Curbside**
15	2	968981	Seat Assembly, 3 Passenger Longitudinal Flip-Up with USB Charger
16	1	968979	Seat Assembly, 1 Passenger Longitudinal Flip-Up with USB Charger
17	10	6476096	Insert Back, VR50 Camira DCM347 Fabric
18	10	6476097	Insert Cushion, Low Smoke Foam Camira DCM347 Fabric
19	21	6476098	Insert Back, VR50 Camira BCP351 Fabric
20	21	6476099	Insert Cushion, Low Smoke Foam Camira DCM351 Fabric
21	2	6498984	Insert Back, VR50 Camira BCP351 Fabric
22	2	6476101	Insert Cushion, Low Smoke Foam Camira DCM351 Fabric
23	19	6491931	Harness, USB
24	21	6489099	Charger, Dual USB
25	2	6484679	Harness, USB
			NOTE: These parts may have a specific color or material code that is required to be included when ordering. Please check to see if those part numbers are listed in the Color/Material Code Index before ordering.

The New Flyer vehicles described in this manual may be protected by one or more patents and design applications or registrations in the United States and Canada, and in other countries. Refer to "Vehicle Patent Information" in this manual.
Copyright © 2024 New Flyer Industries Canada ULC